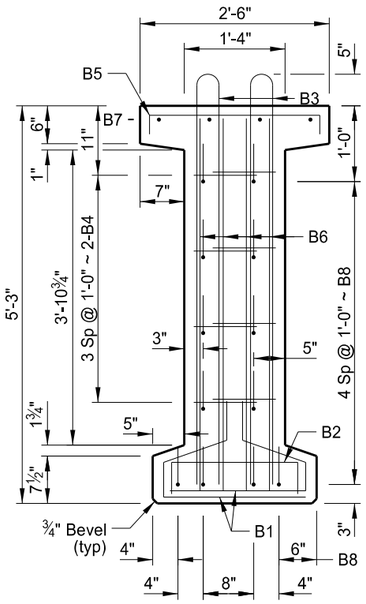

(DETAILS NOT SHOWN ARE SAME AS "SECTION @ ℄")

END VIEW

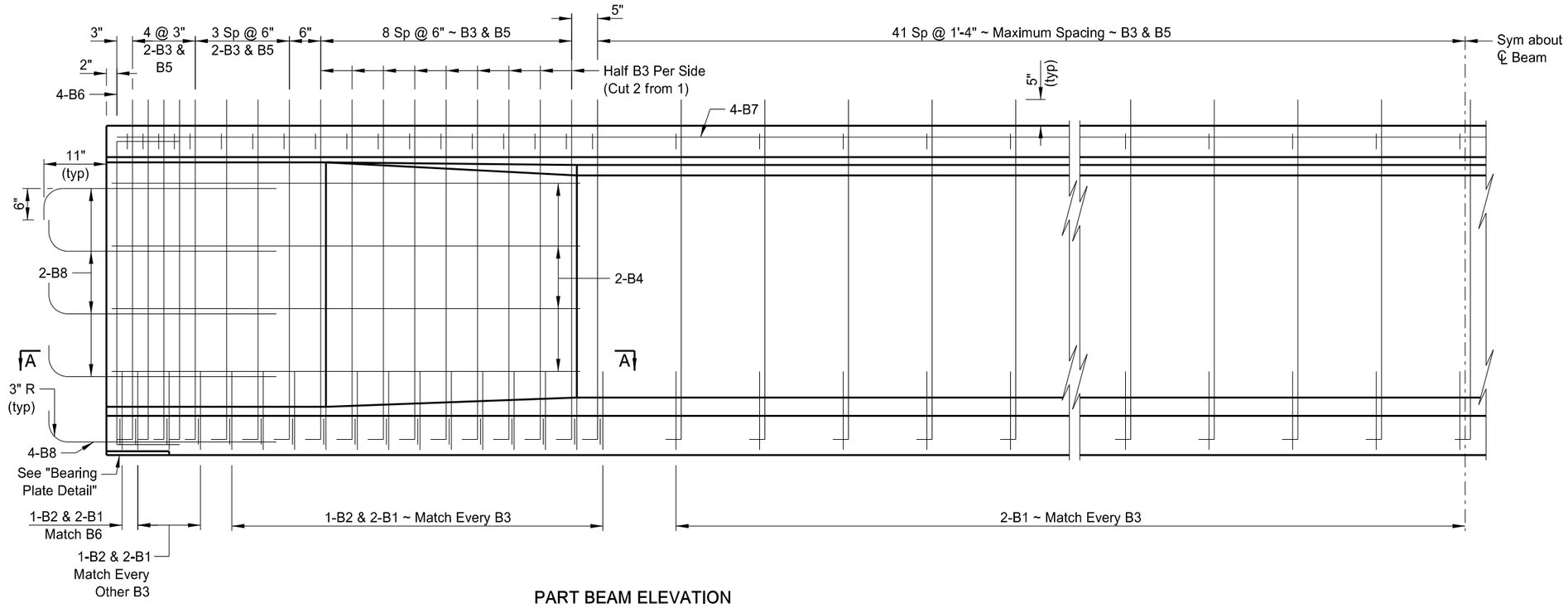

PART BEAM ELEVATION

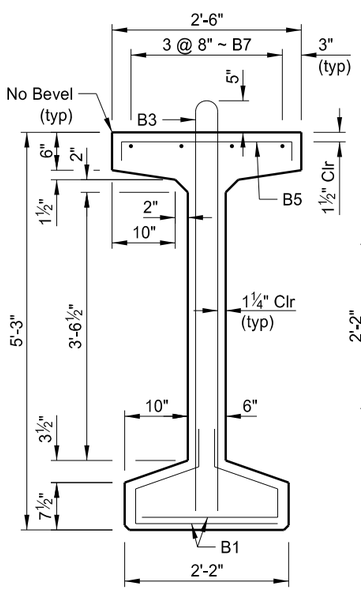

SECTION @ ℄

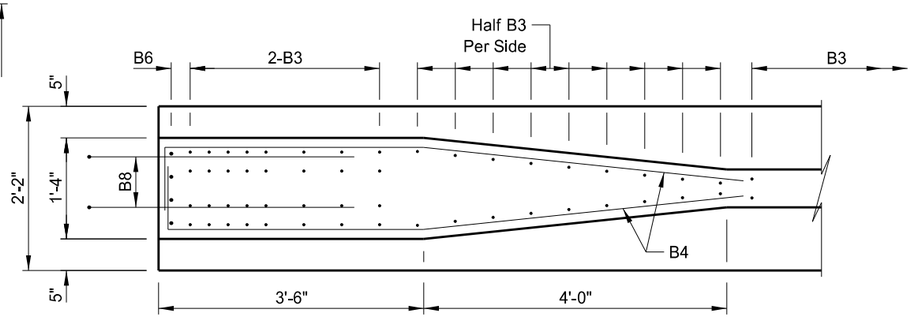

A-A

BAR LIST ~ ONE BEAM				
MARK	SIZE	NO.	LENGTH	SHAPE
B1	3	232	3'- 9"	BENT
B2	3	34	2'- 10"	BENT
** B3	4	134	11'- 6"	BENT
B4	4	16	8'- 5"	BENT
B5	3	118	2'- 9"	BENT
B6	5	8	6'- 11"	BENT
B7	5	16	33'- 6"	STR
* B8	5	24	4'- 0"	STR

* Field bend as shown with a 2.5" minimum bar bend diameter.

** Epoxy Coated

This drawing is preliminary and not for construction or implementation purposes.

PRELIMINARY

I-94/PETTIBONE INTERCHANGE

125'-0" BEAM LENGTH

PRE-TENSIONED 63" PRESTRESSED I-BEAM

DRAWING NO. 94-217.146-12