23 U.S.C. § 407 Documents
NDDOT Reserves All Objections

STATE	PROJECT NO.	SECTION NO.	SHEET NO.
ND	SS-5-085(086)012	170	21

** ½" x 14" Pref Exp Jt Filler
~ Place between approach
slab & abutment wing (typ).

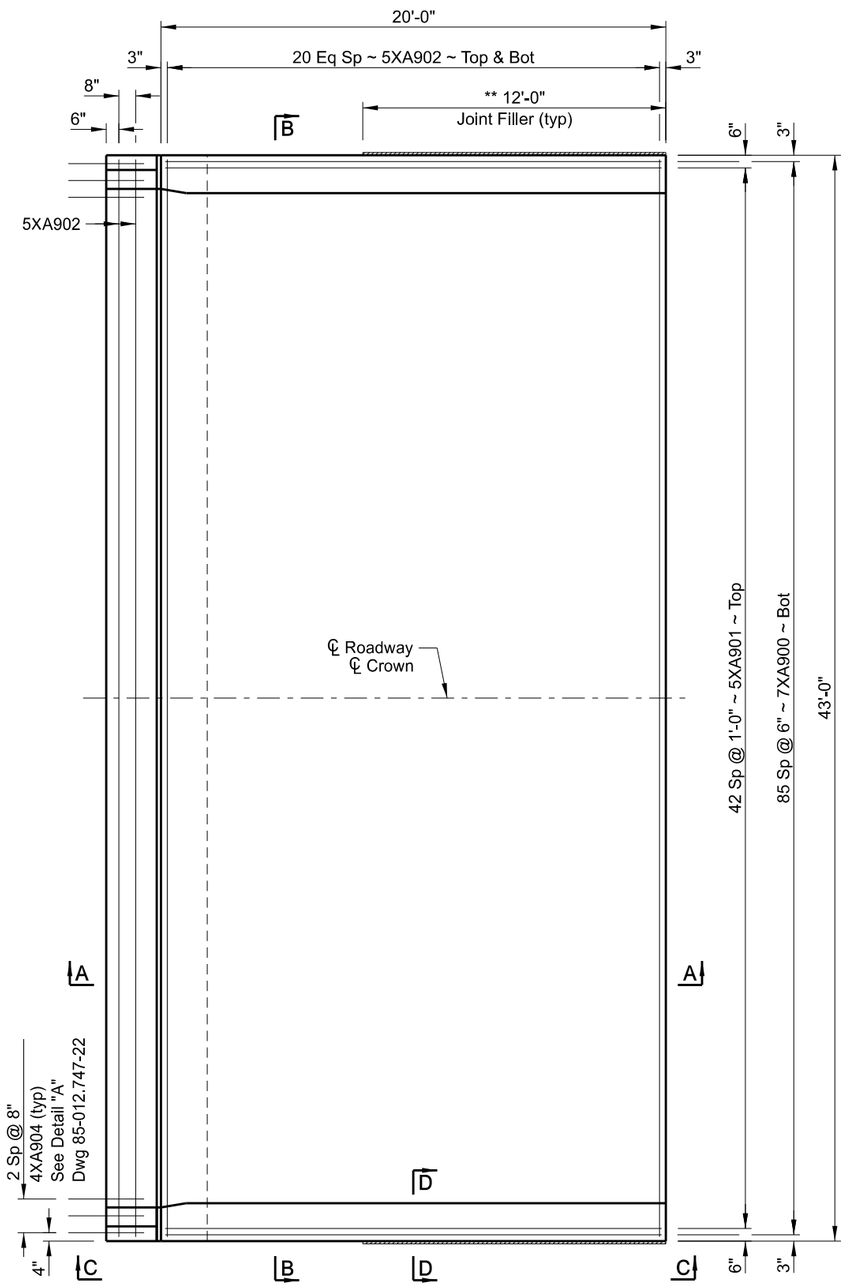

PLAN

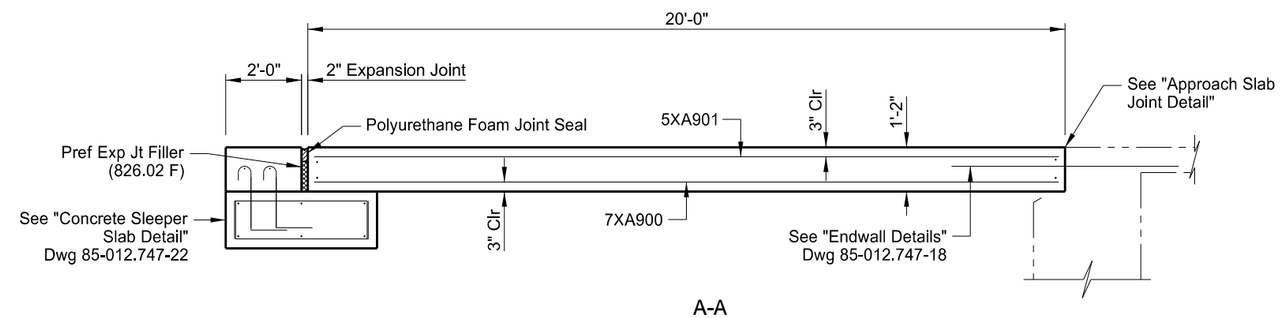

A-A

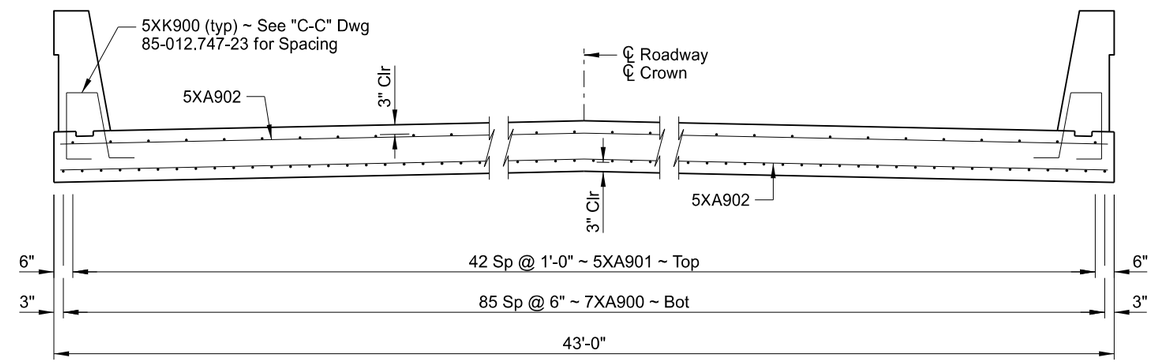

B-B

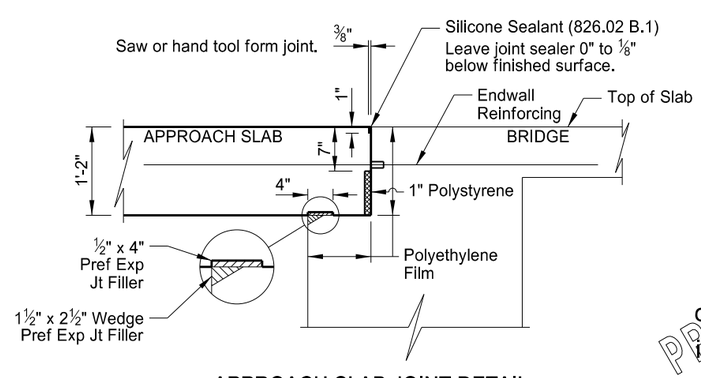

APPROACH SLAB JOINT DETAIL

This drawing is preliminary and not for construction or implementation purposes.

PRELIMINARY

NOTE:

See Dwg 85-012.747-23 for Sections C-C and D-D.

QUANTITIES
SEE DWG 85-012.747-23

SPRING CREEK
4 SOUTH OF JCT US 12

APPROACH SLAB DETAILS

DRAWING NO.	85-012.747-21