23 U.S.C. § 407 Documents
NDDOT Reserves All Objections

STATE	PROJECT NO.	SECTION NO.	SHEET NO.
ND	PROJECT NUMBER	SEC	PAGE

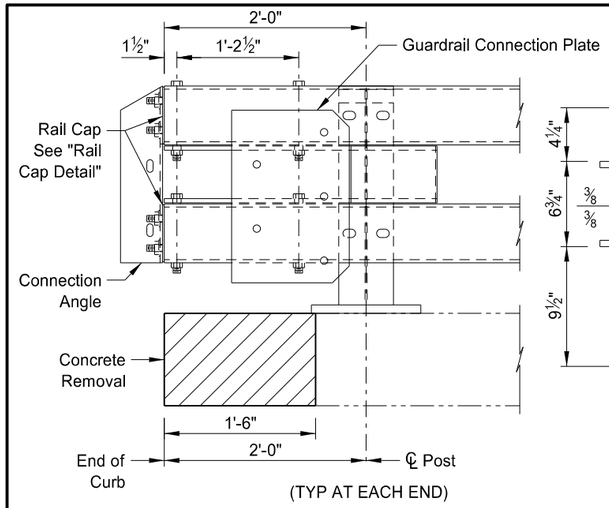

(TYP AT EACH END)

END POST CONNECTION DETAIL

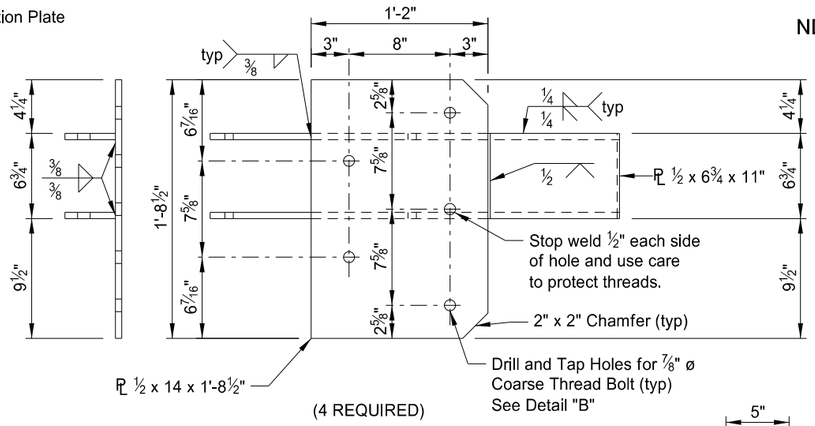

(4 REQUIRED)

ELEVATION

GUARDRAIL CONNECTION PLATE DETAIL

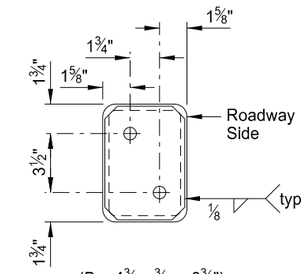

(Bar 4¾ x 3⁄16 x 6¾")
Cope corners 1" to provide zinc drains.

RAIL CAP END VIEW

NOTES:

Provide steel posts and base plates in accordance with ASTM A709 Grade 50. Provide bars, bar washers, and guardrail connection plates and angles in accordance with ASTM A709 Grade 36.

Provide reduced base studs in accordance with ASTM A108 Grade 1010. Provide ⅞" ø anchor bolts in accordance with ASTM F1554 Grade 105.

Remove existing double box beam retrofit railing and posts. Cut existing anchor bolts flush with the top of concrete. Grind out cut anchor bolts ½" below top of concrete and fill holes with light gray epoxy or an approved sealer.

Include all labor, equipment, and materials needed to furnish and install the guardrail connection plates, saw and remove portions of the curb, and remove the existing double box beam rail retrofit in the bid item "Double Box Beam Rail Retrofit-Free Standing."

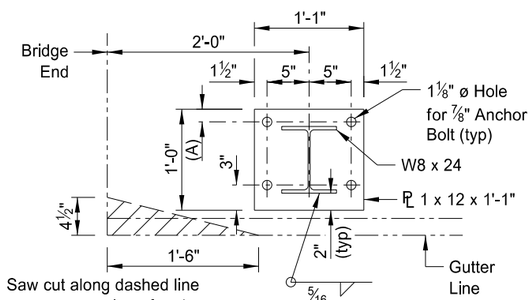

(A) Variable 1½" to 3"

BASE PLATE DETAIL

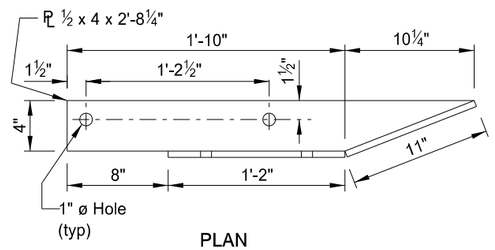

PLAN

GUARDRAIL CONNECTION PLATE DETAIL

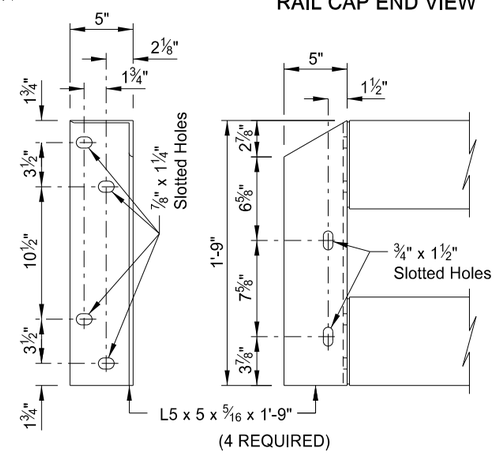

(4 REQUIRED)

CONNECTION ANGLE DETAILS

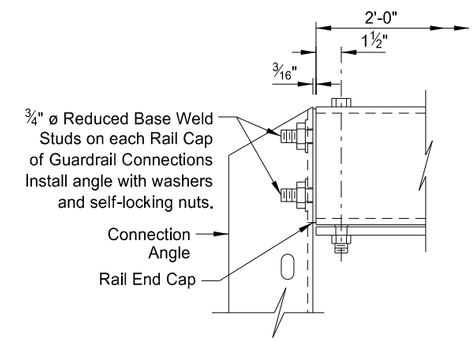

RAIL CAP DETAIL

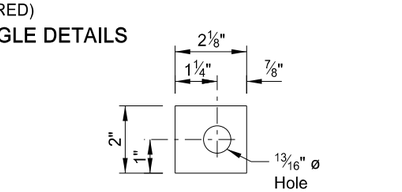

Position washers to completely cover slotted holes.

¼" BAR WASHER "C"

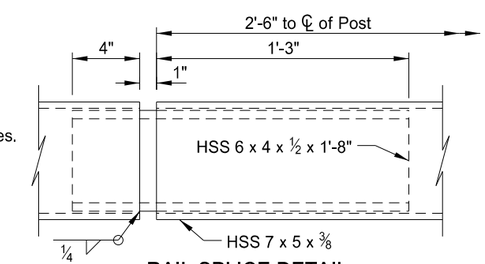

RAIL SPLICE DETAIL

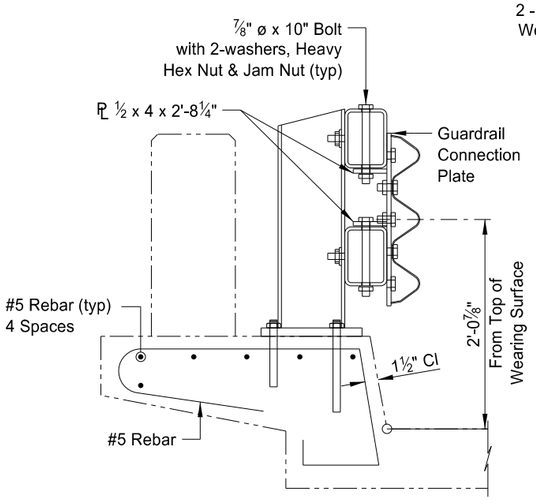

CONNECTION DETAILS

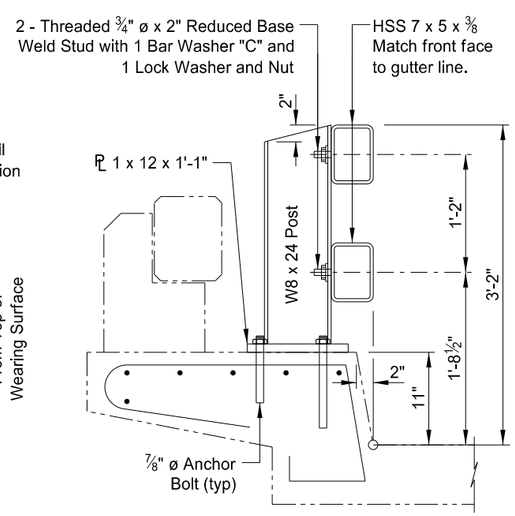

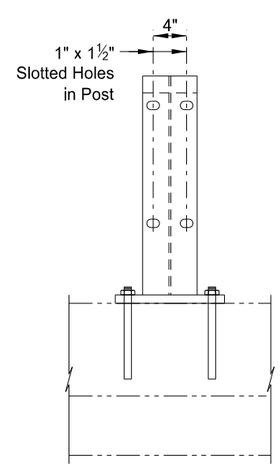

CURB MOUNT POST DETAILS

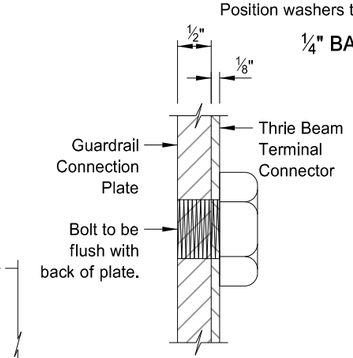

DETAIL "B"

This drawing is preliminary and not for construction or implementation purposes.

PRELIMINARY

QUANTITIES	
RAIL RETROFIT - FREE STANDING	0.0 LF

LOCATION

DOUBLE BOX BEAM RAIL RETROFIT DETAILS (FREE STANDING)

DRAWING NO. 00-000.000-0