23 U.S.C. § 407 Documents
NDDOT Reserves All Objections

STATE	PROJECT NO.	SECTION NO.	SHEET NO.
ND	PROJECT NUMBER	170	3

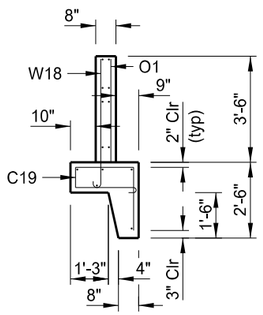

END VIEW

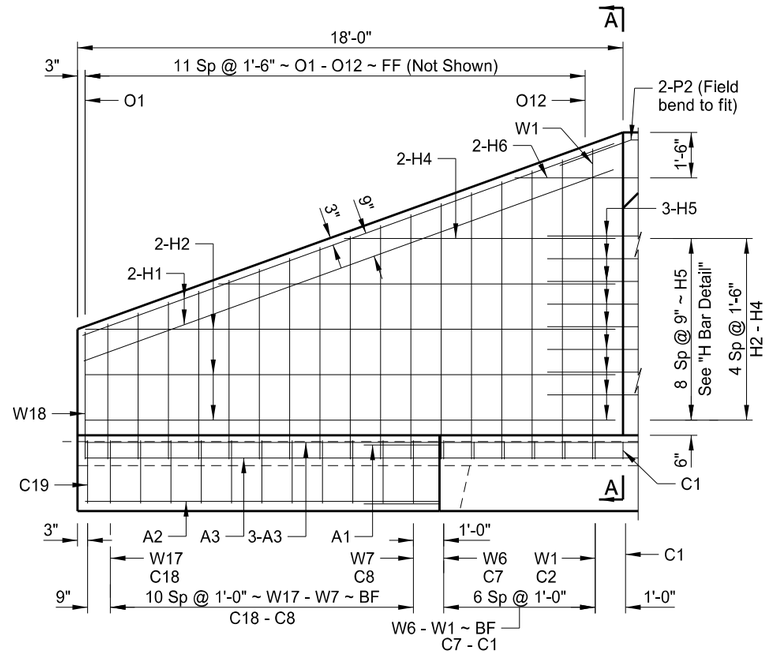

WING ELEVATION

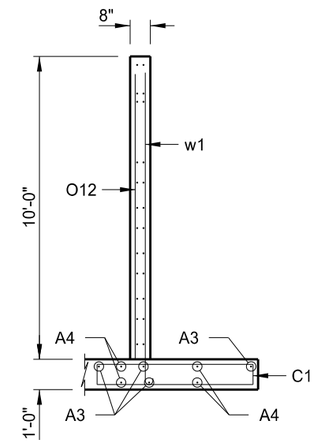

A-A

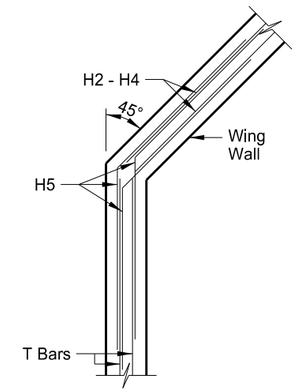

H BAR DETAIL

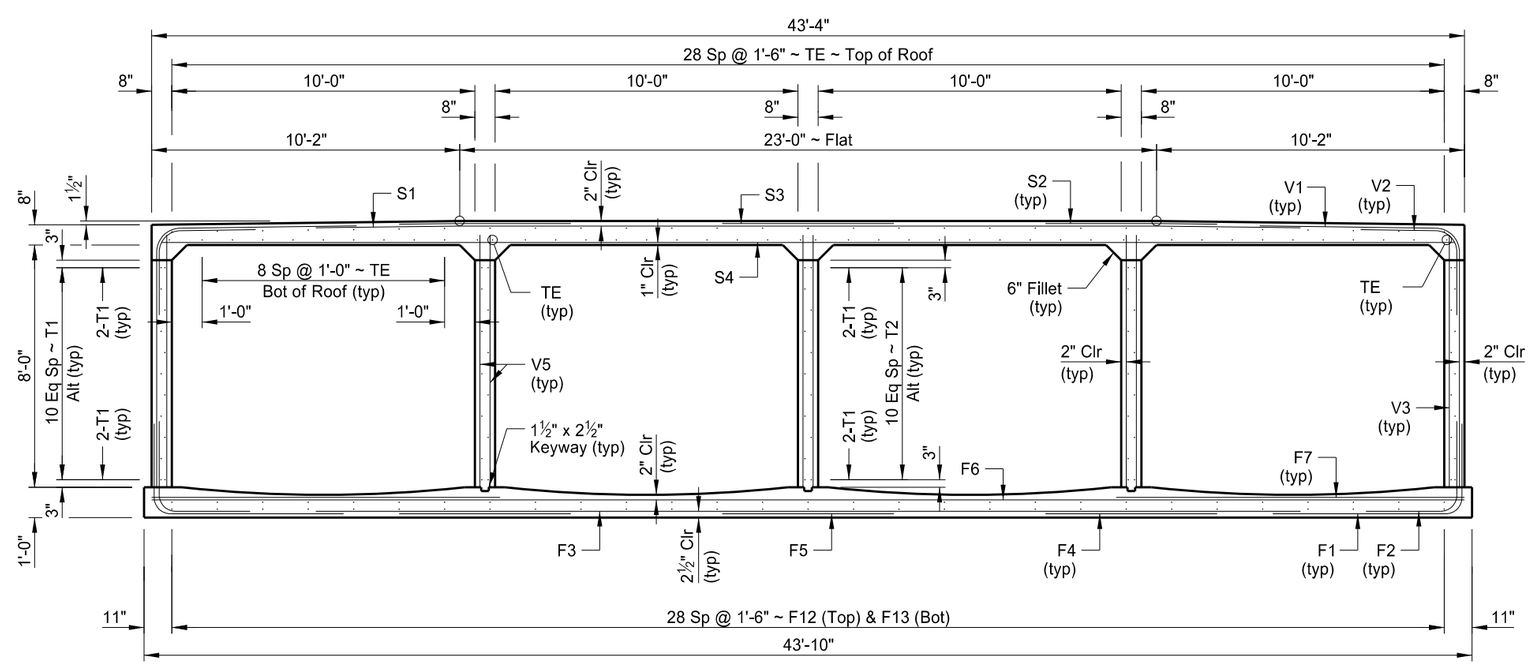

SECTION OF BARREL

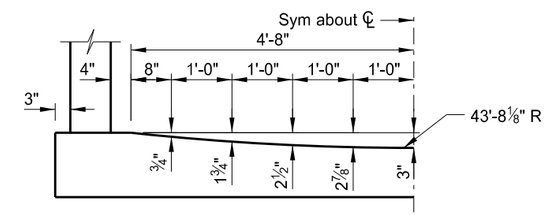

CURVED FLOOR OFFSETS

NOMENCLATURE:

FF = FRONT FACE
BF = BACK FACE

This drawing is preliminary and not for construction or implementation purposes.

PRELIMINARY

LOCATION

BARREL SECTION & WING DETAILS

DRAWING NO. 00-000.000-3