STATE	PROJECT NO.	SECTION NO.	SHEET NO.
ND	project number	20	page

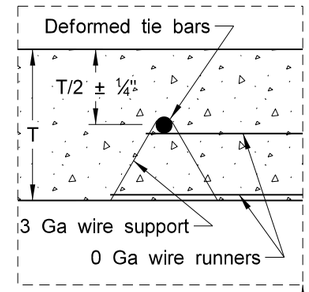

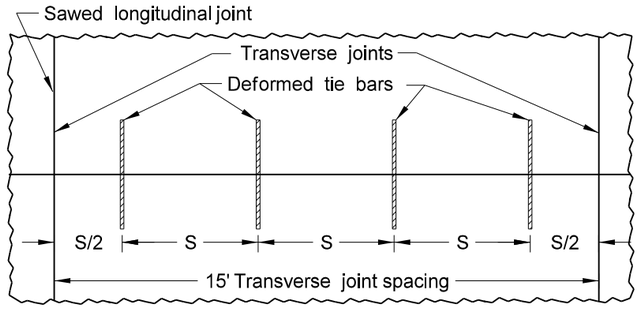

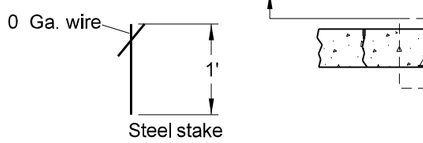

Longitudinal Tie Bar Assembly
(One unit shown)

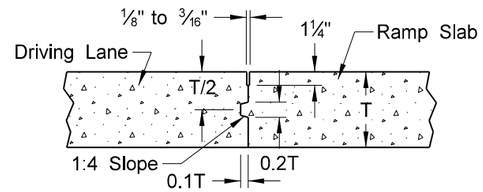

Longitudinal Joint Sawing Detail
(at ramps - non-tied keyed joints)

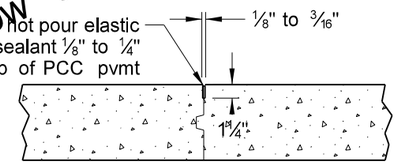

Longitudinal Joint Sealing Detail
(non-tied keyed joints)

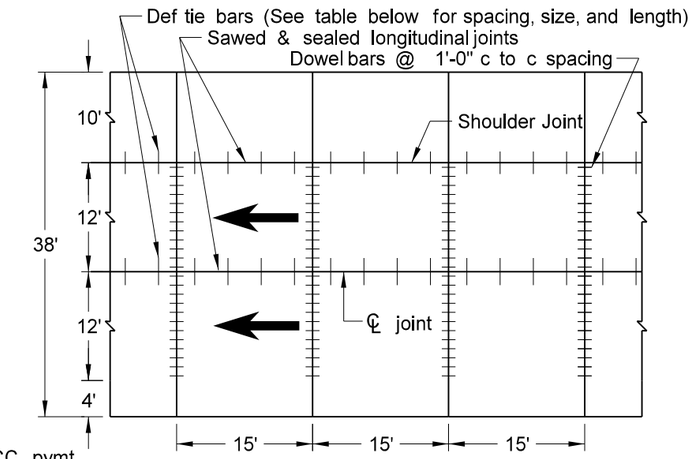

Mainline Joints
15' joint spacing

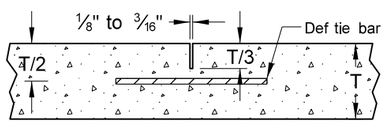

Longitudinal Joint Sawing Detail
(sawed and tied joints)

Deformed Bar Installation (2'-0" c to c)
(at Transverse Joints)

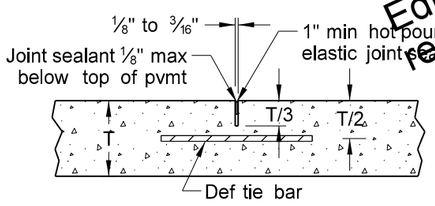

Longitudinal Joint Sealing Detail
(sawed and tied joints)

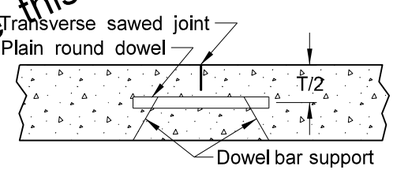

Doweled Transverse Joint

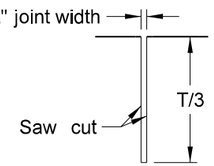

Transverse Joint Sawing

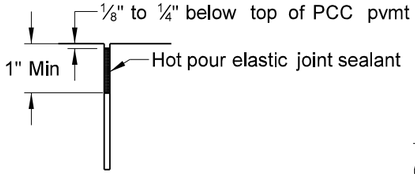

Transverse Joint Sealing

Notes:

1. S = Tiebar spacing
2. T = Pavement thickness
3. Place dowels in ramp tapers also.
4. Place no tie bar within 15" of a transverse joint.

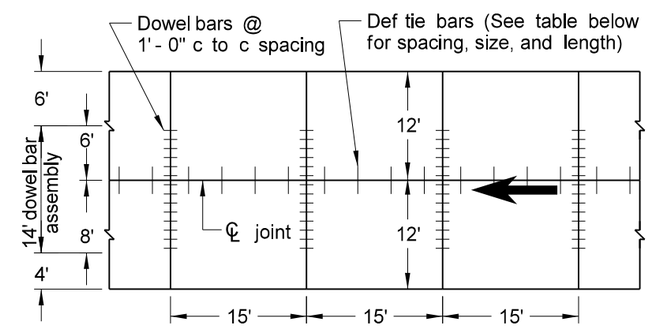

Ramp Joints

Grade 40 Longitudinal Joint Tie Bars														
PCC Depth	8"	8 1/2"	9"	9 1/2"	10"	10 1/2"	11"	11 1/2"	12"	12 1/2"	13"	13 1/2"	14"	14 1/2"	15"
Mainline Centerline															
Bar Size x Length (S=30")	#5 x 30"							#6 x 36"							
Bar Size x Length (S=45")	#6 x 36"									Grade 60 Required					
Ramp/Loop Centerline															
Bar Size x Length (S=30")	#4 x 24"			#5 x 30"									#6 x 36"		
Bar Size x Length (S=45")	#5 x 30"			#6 x 36"									Grade 60 Required		
10' Shoulder Joint															
Bar Size x Length (S=30")	#4 x 24"							#5 x 30"							
Bar Size x Length (S=45")	#5 x 30"									#6 x 36"					

Grade 60 Longitudinal Joint Tie Bars														
PCC Depth	8"	8 1/2"	9"	9 1/2"	10"	10 1/2"	11"	11 1/2"	12"	12 1/2"	13"	13 1/2"	14"	14 1/2"	15"
Mainline Centerline															
Bar Size x Length (S=30")	#4 x 36"						#5 x 42"								
Bar Size x Length (S=45")	#5 x 42"								#6 x 48"						
Ramp/Loop Centerline															
Bar Size x Length (S=30")	#4 x 36"												#5 x 42"		
Bar Size x Length (S=45")	#4 x 36"			#5 x 42"											
10' Shoulder Joint															
Bar Size x Length (S=30")	#3 x 30"					#4 x 36"									
Bar Size x Length (S=45")	#4 x 36"									#5 x 42"					

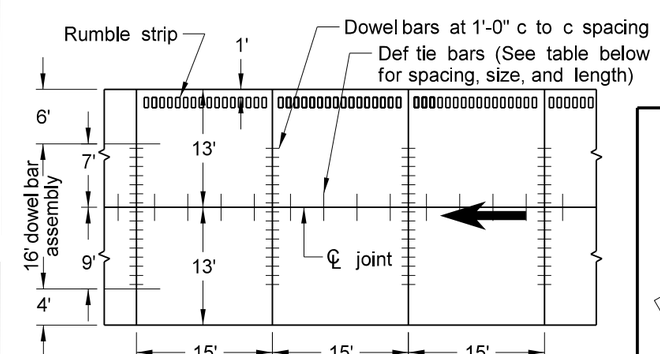

Loop Joints

Transverse Joint Dowel Bars

Joint Location	Dia x Length
ML	d1" x 18"
Ramp	d2" x 18"
Loop	d3" x 18"

This document is preliminary and not for construction or implementation purposes.

PRELIMINARY

PCC Pavement - Perpendicular Joints@15' Spacing and 10' Wide Full Depth PCC Outside Shoulder

PCC Pavement Reconstruction

Project Location

Edit the Transverse Joint Dowel Bar table to show the recommendations from Materials & Research.

Delete this text before using the detail.