STATE	PROJECT NO.	SECTION NO.	SHEET NO.
ND	project number	20	page

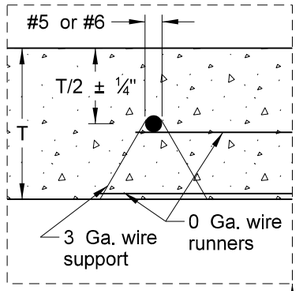

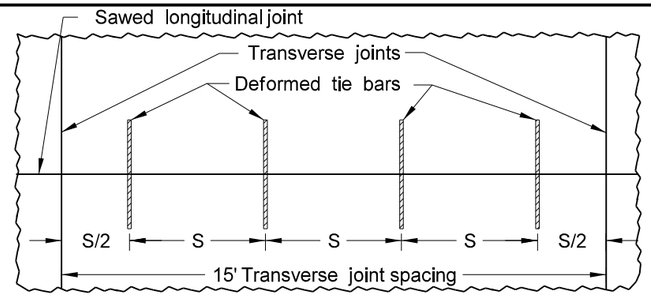

Longitudinal Tie Bar Assembly
(One unit shown)

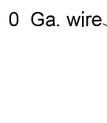

Steel stake

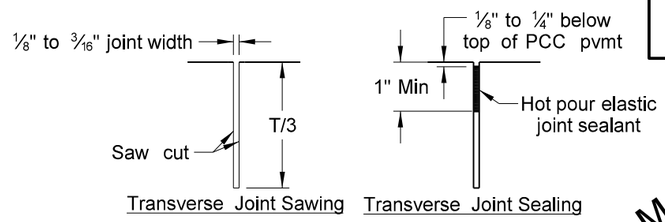

Transverse Joint Sawing Transverse Joint Sealing

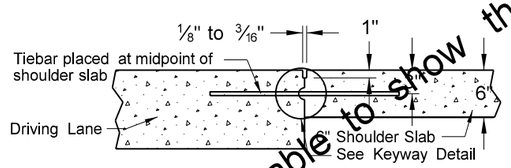

Longitudinal shoulder construction joint
(tied keyed joint)

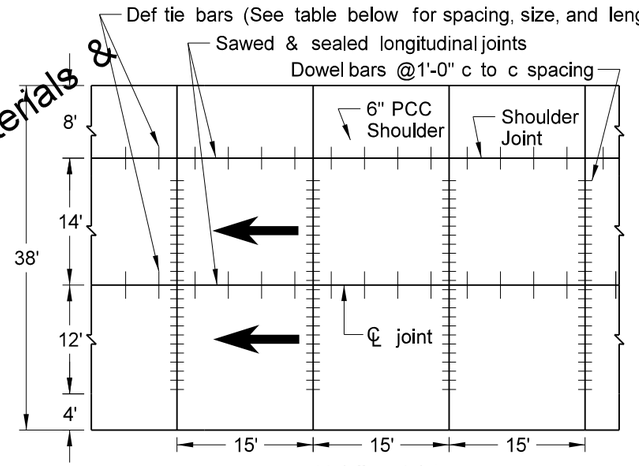

Mainline Joints
15' joint spacing

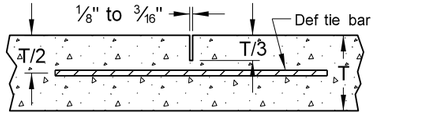

Longitudinal Joint Sawing Detail
(sawed and tied joints)

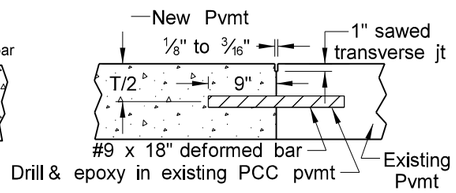

Deformed Bar Installation (2' c to c)
(Transverse Joints)

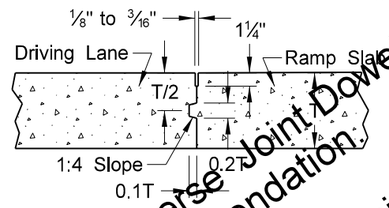

Longitudinal Joint Sawing Detail
(at ramp, non-tied keyed joints)

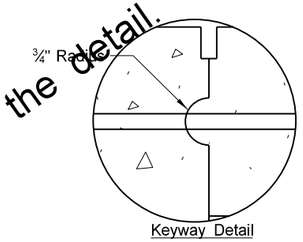

Keyway Detail

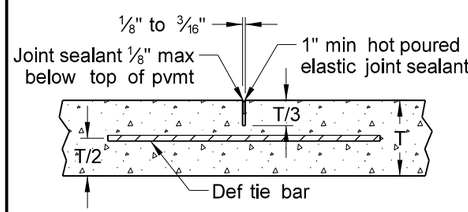

Longitudinal Joint Sealing Detail
(sawed and tied joints)

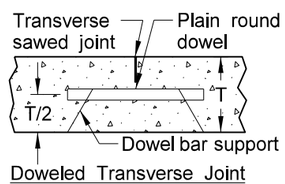

Doweled Transverse Joint

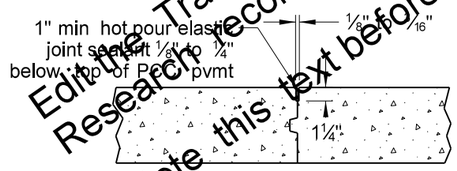

Longitudinal Joint Sealing Detail
(non-tied keyed joints)

Notes:
1. S = Tiebar spacing
2. T = Pavement thickness
3. Place dowels in ramp tapers also.
4. Place no tie bar within 15" of a transverse joint.

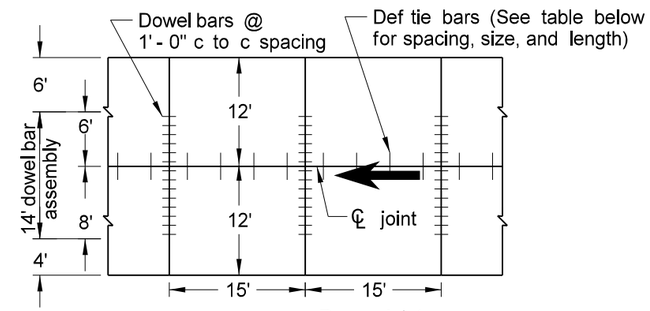

Ramp Joints

Grade 40 Longitudinal Joint Tie Bars															
PCC Depth	6"	8"	8 1/2"	9"	9 1/2"	10"	10 1/2"	11"	11 1/2"	12"	12 1/2"	13"	13 1/2"	14"	14 1/2"	15"
Mainline Centerline																
Bar Size x Length (S=30")		#5 x 30"							#6 x 36"							
Bar Size x Length (S=45")		#6 x 36"								Grade 60 Required						
Ramp/Loop Centerline																
Bar Size x Length (S=30")		#4 x 24"		#5 x 30"										#6 x 36"		
Bar Size x Length (S=45")		#5 x 30"			#6 x 36"									Grade 60 Required		
8' Shoulder Joint																
Bar Size x Length (S=45")	#4 x 24"															

Grade 60 Longitudinal Joint Tie Bars															
PCC Depth	6"	8"	8 1/2"	9"	9 1/2"	10"	10 1/2"	11"	11 1/2"	12"	12 1/2"	13"	13 1/2"	14"	14 1/2"	15"
Mainline Centerline																
Bar Size x Length (S=30")		#4 x 36"						#5 x 42"								
Bar Size x Length (S=45")		#5 x 42"								#6 x 48"						
Ramp/Loop Centerline																
Bar Size x Length (S=30")		#4 x 36"											#5 x 42"			
Bar Size x Length (S=45")		#4 x 36"		#5 x 42"										#6 x 48"		
8' Shoulder Joint																
Bar Size x Length (S=45")	#3 x 30"															

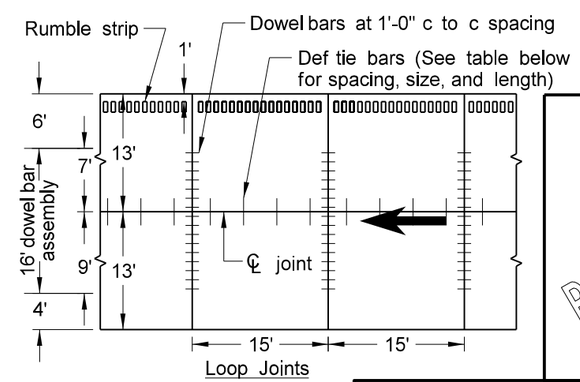

Loop Joints

Transverse Joint Dowel Bars

Joint Location	Dia x Length
ML	d1" x 18"
Ramp	d2" x 18"
Loop	d3" x 18"

This document is preliminary and not for construction or implementation purposes.

PRELIMINARY

PCC Pavement - Perpendicular Joints@15' Spacing and 8' Wide 6" Depth PCC Outside Shoulder

PCC Pavement Reconstruction

Project Location

Edit the Transverse Joint Dowel Bar table to show the Materials & Research recommendation.

Delete this text before using the detail.